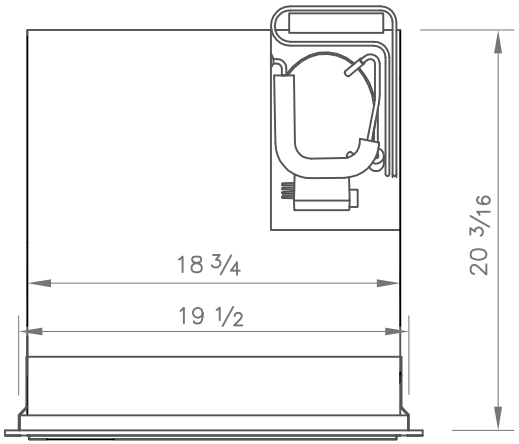

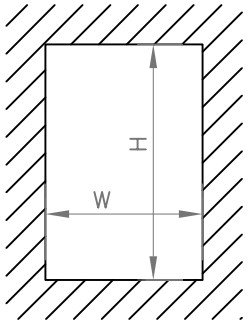

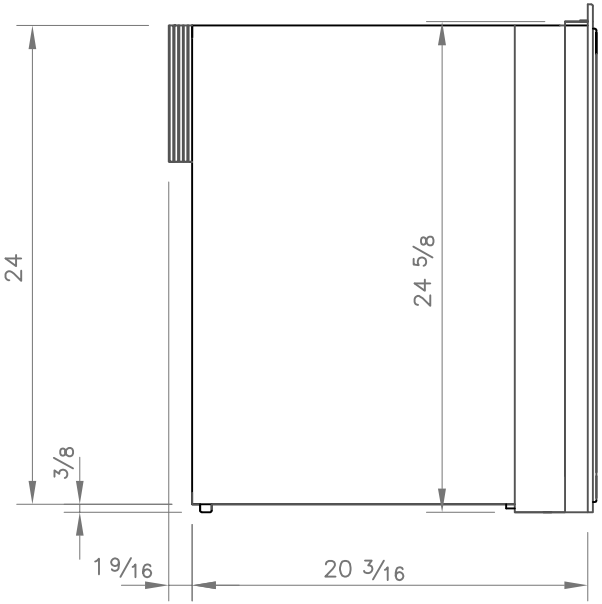

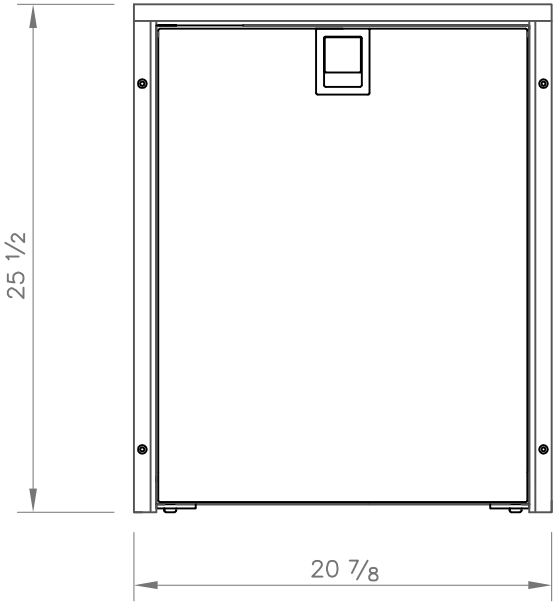

Mounting hole
Cut–out

Dims. mm	WxH
Nominal	19 7/8 x 25
Min	19 1/2 x 24 5/8
Max	20 3/16 x 25 3/16

RevNo	Revision note	Date	Signature	Checked

Itemref	Quantity	Title/Name, designation, material, dimension etc			Article No./Reference	
Designed by		Checked by	Approved by – date	Filename	Date 071213/LLG	Scale
Owner isotherm ® by indel marine		Title/Name Isotherm Cruise 63 Freezer				
		Drawing number CR63 Freezer			Edition INOX	Sheet US